Line
3130
www.inoxsystem.it

Linear drain "Italia IDrain" with double slot with flattened edges with direct outlet Ø 50 mm without odor trap All made in stainless steel Aisi 304 (Aisi 316 Upon request)

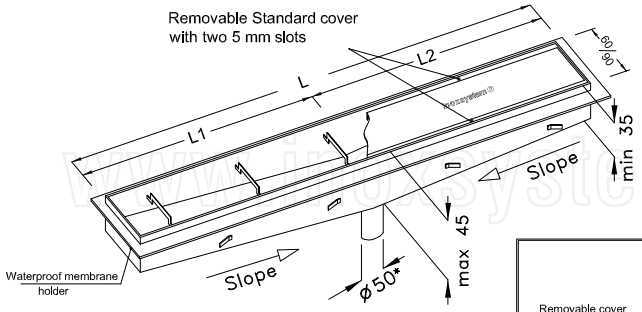

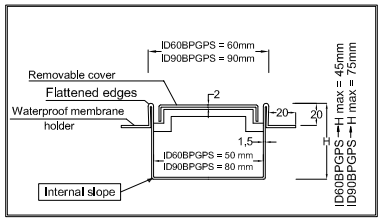

Inoxsystem®

www.Inoxsystem.It - Info@Inoxsystem.It

LINEAR DRAIN "ITALIA IDrain" WITH DOUBLE SLOT
WITH DIRECT OUTLET Ø 50 mm WITHOUT ODOR TRAP
WITH FLATTENED EDGES
Vertical outlet in the center

Made of Art.:
- Italia IDrain channel with double slot Art. "ID60BPGPS"
- Italia IDrain channel with double slot Art. "ID90BPGPS"
- Vertical direct outlet Art. "IDSVID"
- Welded end cap Art. "IDTC"
- Further channel welding Art. "IDSC"

Upon request:
- Flange connection Art. "IDFL"
- Removable filter basket Art. "IDFE"

* all measures can be modified upon request

Dwg Inoxsystem®
3133

Art. CIDVBPGPS

All made in stainless steel 1.5 mm thickness
AISI 304/304L(EN 1.4301/1.4307) - Upon request AISI 316/316L(EN 1.4401/1.4404)

N.B.: all measures are in mm

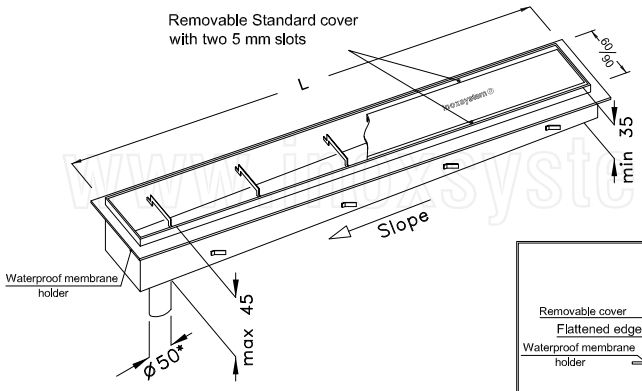

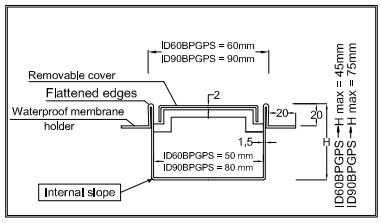

Inoxsystem®

www.Inoxsystem.It - Info@Inoxsystem.It

LINEAR DRAIN "ITALIA IDrain" WITH DOUBLE SLOT
WITH DIRECT OUTLET Ø 50 mm WITHOUT ODOR TRAP
WITH FLATTENED EDGES
Vertical outlet on the head

Made of Art.:
- Italia IDrain channel with double slot Art. "ID60BPGPS"
- Italia IDrain channel with double slot Art. "ID90BPGPS"
- Vertical direct outlet Art. "IDSVID"
- Welded end cap Art. "IDTC"
- Further channel welding Art. "IDSC"

Upon request:
- Flange connection Art. "IDFL"
- Removable filter basket Art. "IDFE"

* all measures can be modified upon request

Dwg Inoxsystem®
3134

Art. CIDVTBPGPS

All made in stainless steel 1.5 mm thickness
AISI 304/304L(EN 1.4301/1.4307) - Upon request AISI 316/316L(EN 1.4401/1.4404)

N.B.: all measures are in mm

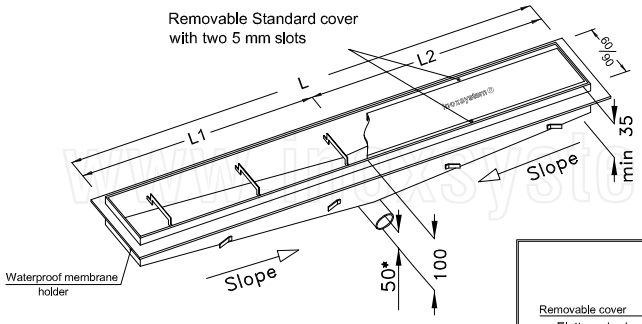

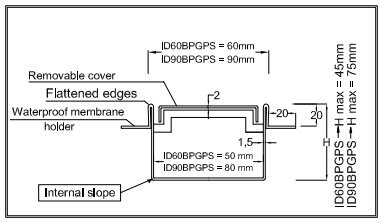

Inoxsystem®

www.Inoxsystem.It - Info@Inoxsystem.It

LINEAR DRAIN "ITALIA IDrain" WITH DOUBLE SLOT
WITH DIRECT OUTLET Ø 50 mm WITHOUT ODOR TRAP
WITH FLATTENED EDGES
Horizontal outlet in the center

Made of Art.:
- Italia IDrain channel with double slot Art. "ID60BPGPS"
- Italia IDrain channel with double slot Art. "ID90BPGPS"
- Horizontal direct outlet Art. "IDSLID"
- Welded end cap Art. "IDTC"
- Further channel welding Art. "IDSC"

Upon request:
- Flange connection Art. "IDFL"
- Removable filter basket Art. "IDFE"

* all measures can be modified upon request

Dwg Inoxsystem®
3131

Art. CIDOBPGPS

All made in stainless steel 1.5 mm thickness
AISI 304/304L(EN 1.4301/1.4307) - Upon request AISI 316/316L(EN 1.4401/1.4404)

N.B.: all measures are in mm

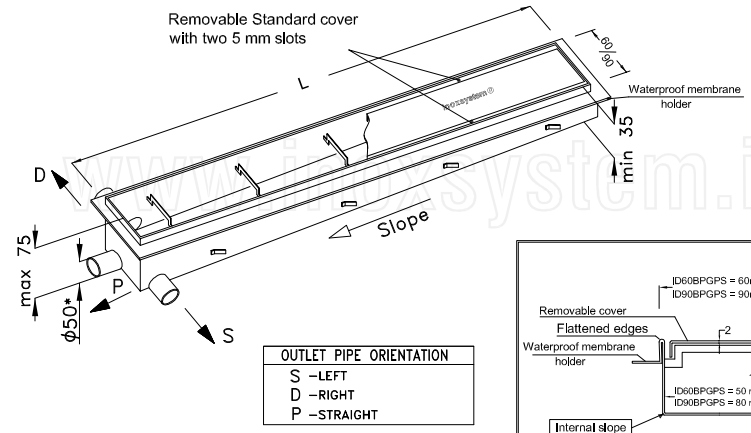

OUTLET PIPE ORIENTATION
S –LEFT
D –RIGHT
P –STRAIGHT

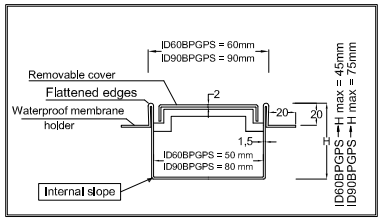

Inoxsystem®

www.Inoxsystem.It - Info@Inoxsystem.It

LINEAR DRAIN "ITALIA IDrain" WITH DOUBLE SLOT
WITH DIRECT OUTLET Ø 50 mm WITHOUT ODOR TRAP
WITH FLATTENED EDGES
Horizontal outlet on the head

Made of Art.:
- Italia IDrain channel with double slot Art. "ID60BPGPS"
- Italia IDrain channel with double slot Art. "ID90BPGPS"
- Horizontal direct outlet Art. "IDSLID"
- Welded end cap Art. "IDTC"
- Further channel welding Art. "IDSC"

Upon request:
- Flange connection Art. "IDFL"
- Removable filter basket Art. "IDFE"

* all measures can be modified upon request

Dwg Inoxsystem®
3132

Art. CIDOTBPGPS

All made in stainless steel 1.5 mm thickness
AISI 304/304L(EN 1.4301/1.4307) - Upon request AISI 316/316L(EN 1.4401/1.4404)

N.B.: all measures are in mm

These drawings are property of Inoxsystem® and they cannot be used or copied without our formal permission